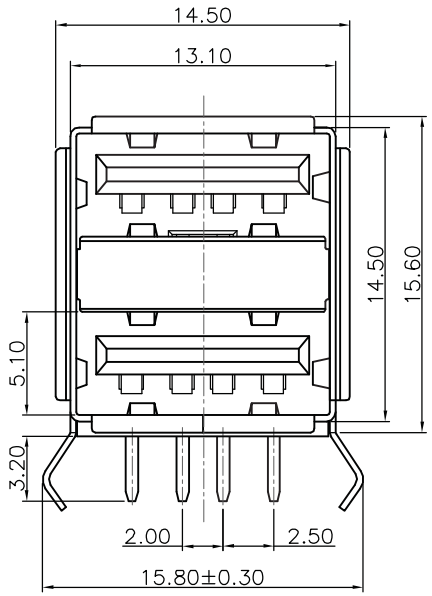

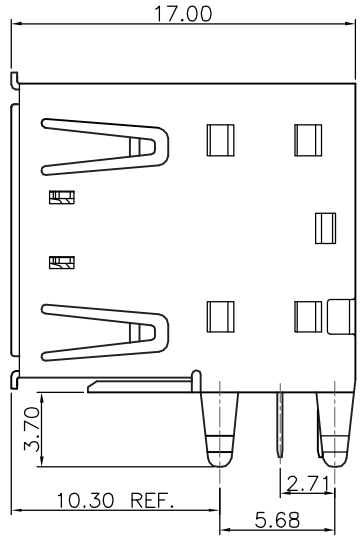

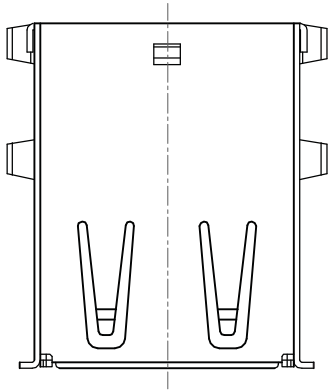

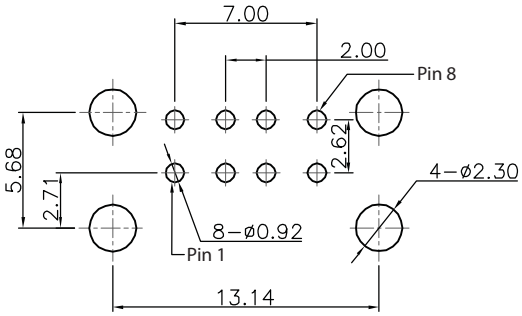

Recommended PCB Layout

Material:
- Contacts: Brass
- Insulator: PBT+30% G.F. UL94V-0, White
- Shell: Brass

Electrical:
- Current-max[amps]: 1.0A
- Voltage-max[volts]: 30V
- Withstanding Voltage: 750V AC
- Conductor resistance: 30MΩ Max.
- Insulation Resistance: 1,000MΩ Min.
- Hi-Pot test: DC 300V

Plating:
- Contacts: Gold plated
- Shell: Nickel plated

Environmental:
- Soldering Temperature: 223.3°C Max.

Unit: mm

RoHS Compliant

Scale	Free
TOLERANCE	
X.	±X
X.X	±0.25
X.XX	±X
DIM	TOL
X.°	±X°
X.X°	±X°
Angle	TOL

Id.	Modification	Date	Name
1	Drawing modification	07.12.12	Wilson

	Date	Name
Drawn	23.05.12	Miller
Approved	23.05.12	Warner

ASSMANN WSW components
1840 W. Drake Drive, Suite 101 • Tempe, AZ 85283
Toll Free: 1-877-277-6266 • Email: info@assmann.us

Title
USB 2.0 Connector 2-Port
for PCB Mount, A Female type, 30µ" Gold

ASSMANN WSW-No.
AU-Y1008-2-R

Drawing-No.

rev01

Replace

Sheet 1/1